Valves, Actuators, Accessories

N Series Solenoid Valve

Technical Data

Function	3/2 , 5/2 and 5/3 solenoid and air operated valves.
Manual override	Locking manual override standard on all solenoid operated versions.
Design	Pilot operated spool valve with combined pneumatic and spring return.
Mounting	For direct mounting on NAMUR interface.
Mounting position	Any position.
Material specifications	Aluminium body. Stainless steel is available.
Media	Dry or lubricated air.
Fluid temperature	Min. 32°F (0 °C) Max. 122°F (+ 50 °C)
Electrical parts	See information of coils.
Voltage	24 VDC, 48 VDC, 110 AC, 220 AC
Voltage tolerance	± 10% of nominal

Applications

- 3 or 5port directional valves for the control of single or double acting pneumatic actuators
- The interface design corresponds to the NAMUR standard and the VDI/VDE 3845 recommendations of the actuator industry permitting a compact design of the actuator/valve unit.

Working Principle

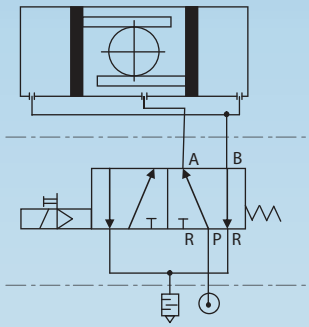

2W5

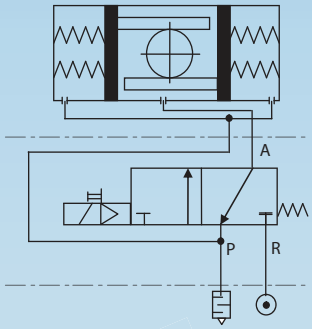

2W3

NAMUR Interfaces

T	D1 in (mm)	D2 in (mm)	M mm
1/4″	1.26 (32)	0.95 (24)	M5
1/2″	1.77 (45)	1.58 (40)	M6

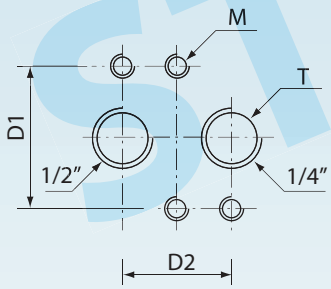

ST.HANS

N Series Solenoid Valve

Solenoid Coil

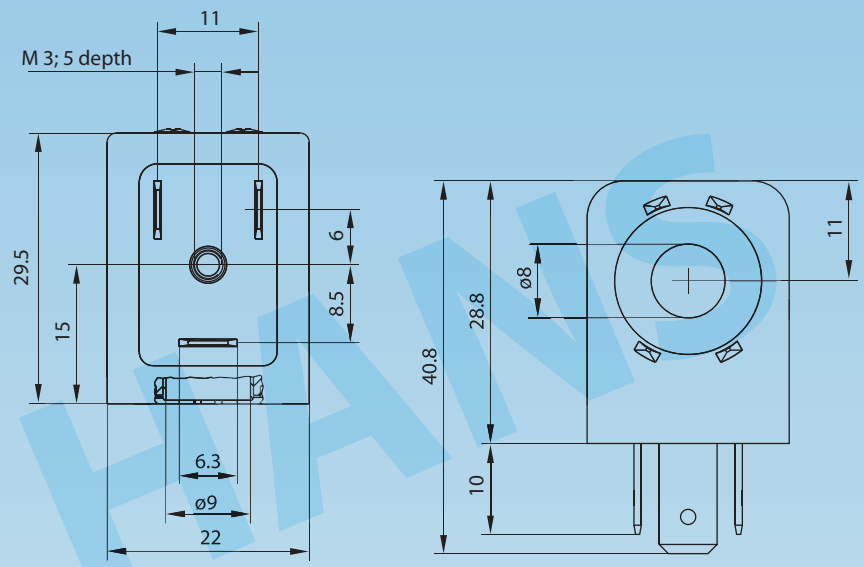

Width: 22 mm

Connection Type: Industry Form

Moulding Material: Thermoset Resin

General Data

Voltage tolerance	-10% ~+10%
Ambient temperature	-20°C ~+50°C
Relative duty cycle	100%
Insulation class of insulating materials according to DIN VDE 0580	F
Degree of protection with connector according to EN 60529	IP 65 / IP 67*
Imprint (customer imprint - special version)	Nass Magnet

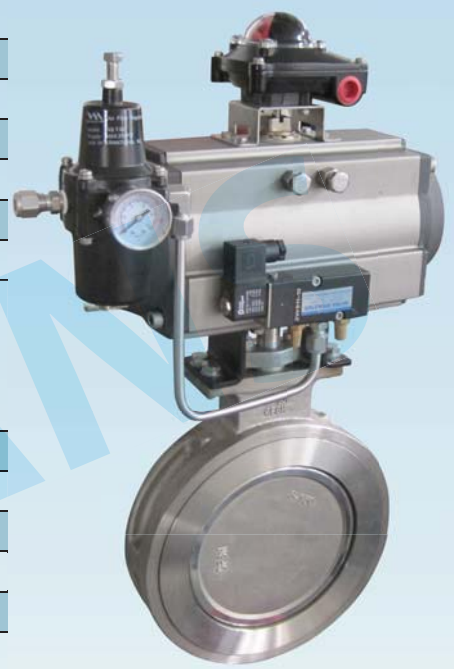

Technical Data

Voltage[V]	Frequency[Hz]	Output
12DC	-	4.6W
24DC	-	3.0W
48DC	-	2.7W
110AC	50/60	5.7/4.6VA
220AV	50/60	8.5/6.9VA

ST.HANS

Solenoid Coil System 8 ATEX

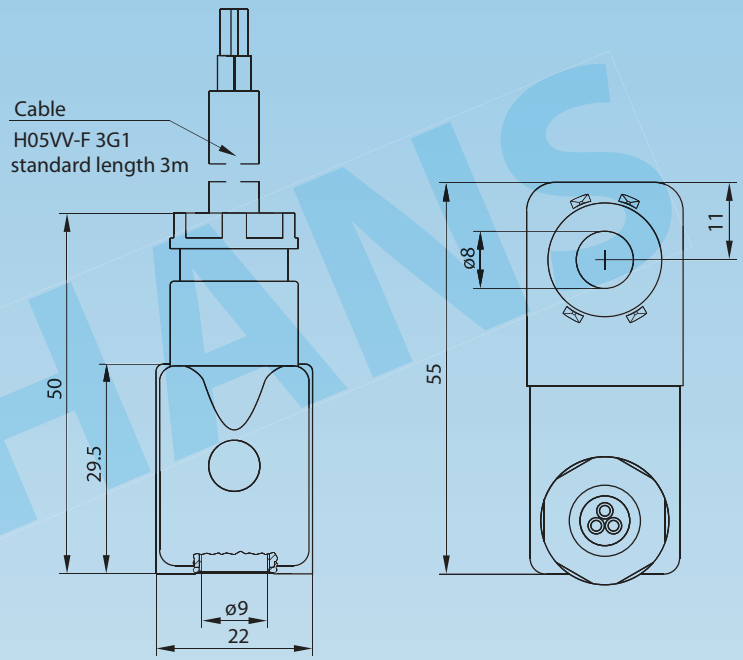

Widths : 22 mm

Ex II 2G EEx m II T_/IEC Ex m II T_

Ex II 2D IP 65 T_ °C/ IP65 DIP A21 T_ °C

Protection by Encapsulation

Connection Type: Cable H05VV-F 3G1

EC-Type Examination Certificate

PTB 00 ATEX 2001X / IECEx PTB 05.0006

General Data

Voltage tolerance	-10% ~+10%
Ambient temperature	-20°C ~+50°C
Relative duty cycle	100%
Insulation class of insulating materials according to DIN VDE0580	F
Degree of protection with connector to EN 60529	IP 65
Moulding material	Thermoplastoc
Cable length(other cable lengths on request)	3 m

Technical Data

Width	Voltage[V]	Frequency[Hz]	Output	Temperature Class
22mm	24DC	-	3.0W	T4
22mm	220AC	50/60	5.1VA	T4

ST.HANS

Solenoid Coil System 8 ATEX

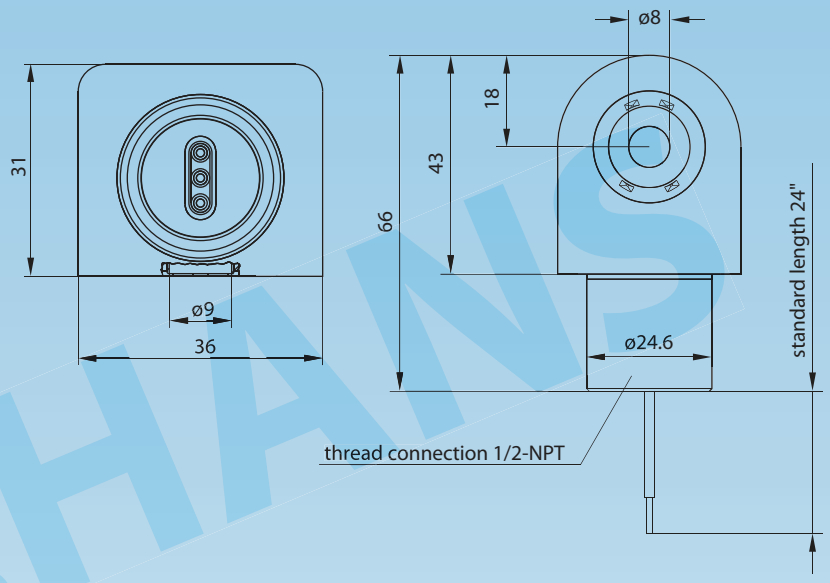

Special Version: System 8 Ex CSA/FM

Width : 36 mm

Ex m II T4 + Division 1

Connection Type : Flying Leads, Thread 1/2-NPT

EC-Type Examination Certificate

CSA 202633

Hazardous Locations

Ex m II T4 and division 1 - Class I, Group A, B, C and D - Class II, Group E, F and G - Class III

Approved in compliance with CAN/ CSA-E79-0-95 and CAN/ CSA-E79-18-95 for CSA, according to ANSI/ ISA-S12.00.01-1999 and ANSI/ ISA-S12.23.01-1998 for FM.

General Data

Voltage tolerance	-10% ~+10%
Ambient temperature	-20°C ~+60°C
Relative duty cycle	100%
Insulation class of insulating materials according to DIN VDE0580	H
Degree of protection with connector to EN 60529	IP 65
Moulding material	Thermoplastoc
Cable length(other cable lengths on request)	24Inch/0.6 m

Technical Data

Voltage[V]	Frequency[Hz]	Output	Thread Connection	Temperature Class
24DC	-	4.6W	Stainless Steel	T4
220AC	50	7.7VA	Stainless Steel	T4

ST.HANS

Dimension

2W312-10-S

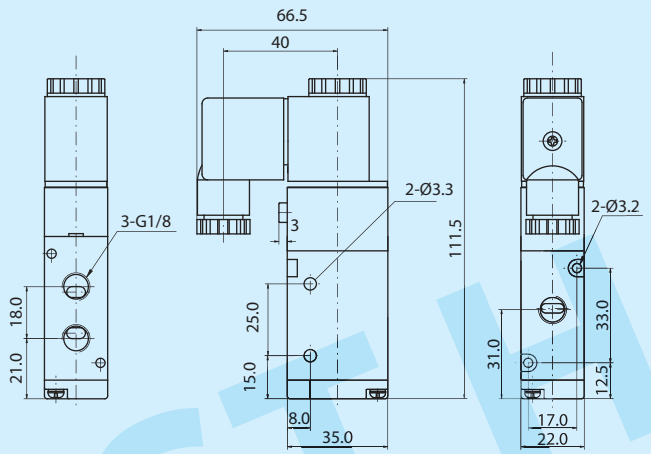

2W512-10-S

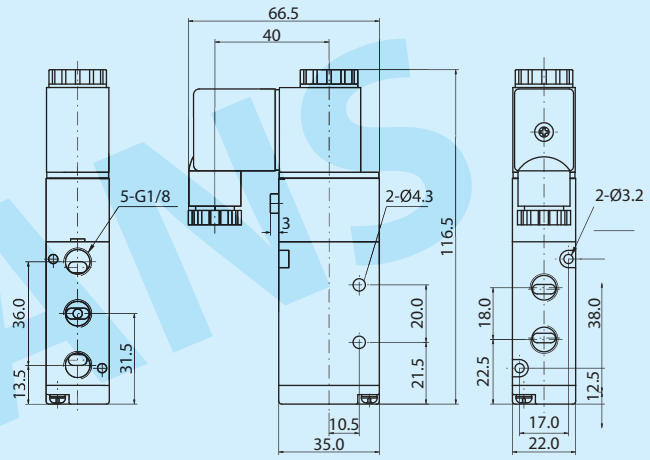

2W522-10-S

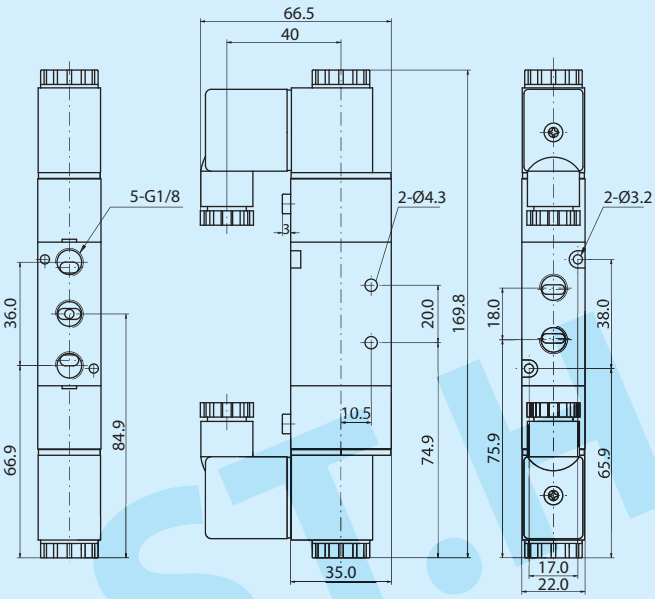

3W522-10-S

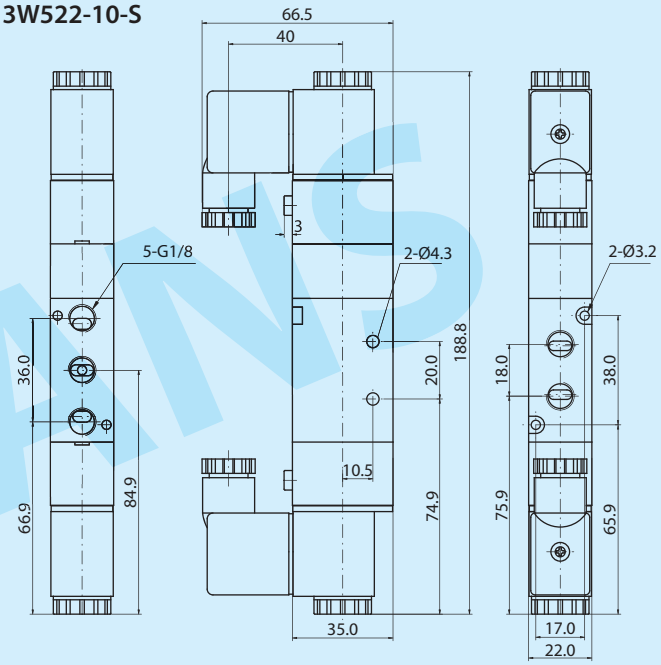

If you enquire any further information, please do not hesitate to contact us.

ST.HANS

Dimension

2W312-10

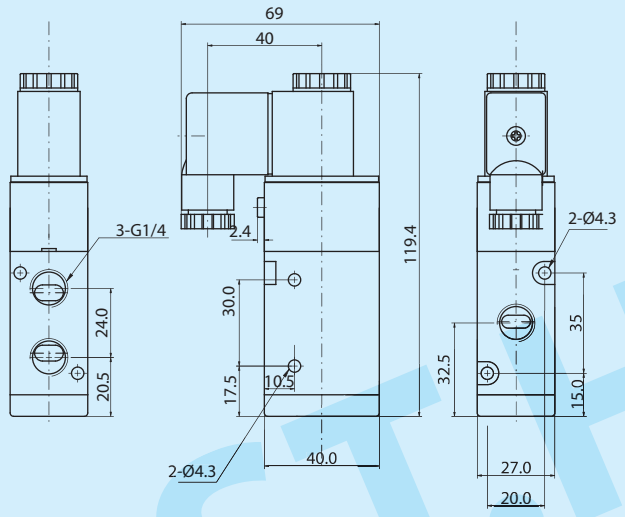

2W512-10

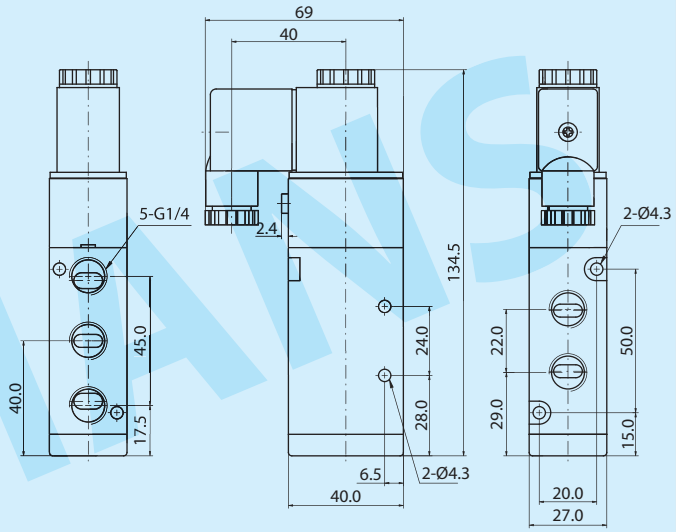

2W522-10

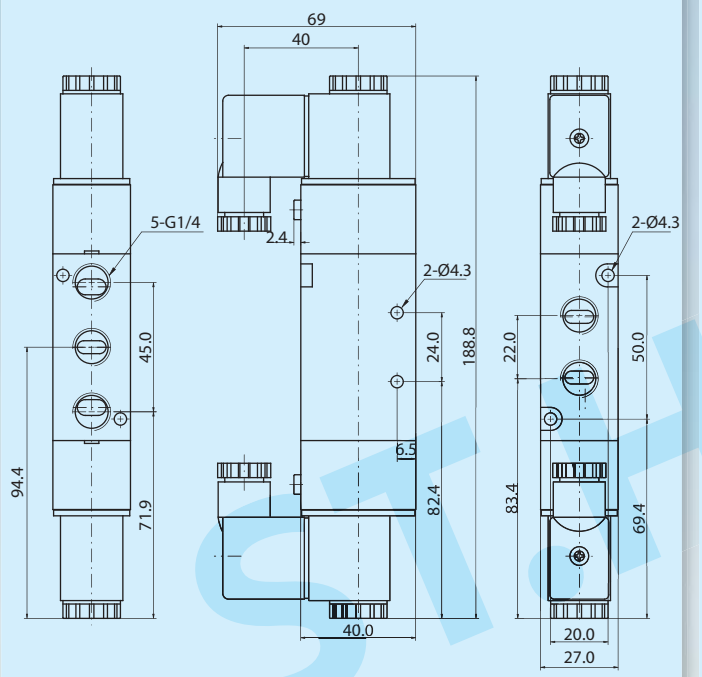

3W522-10

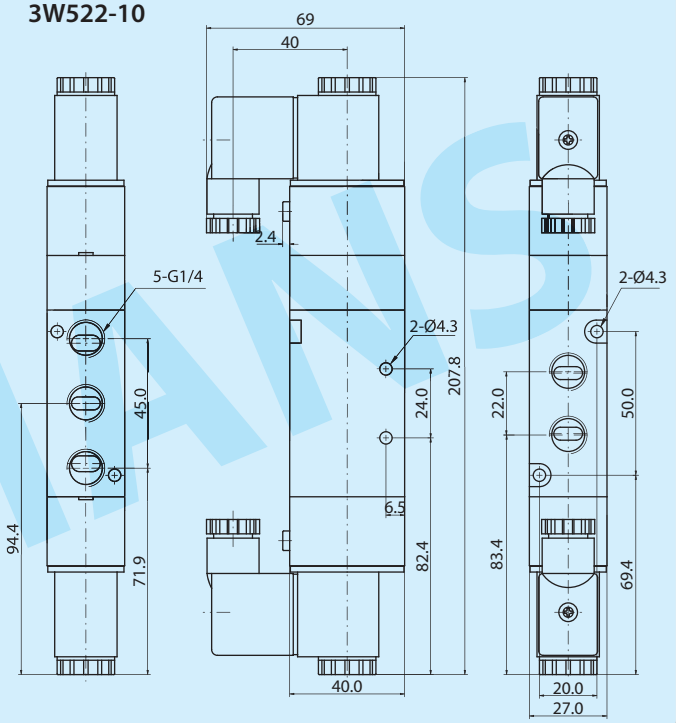

If you enquire any further information, please do not hesitate to contact us.

Dimension

2W311-10

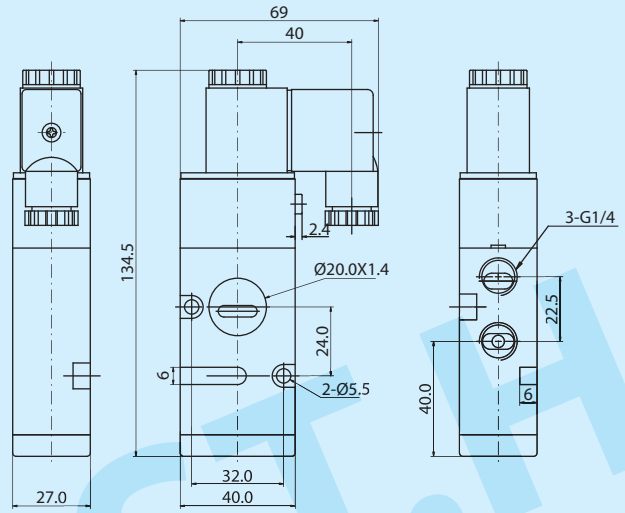

2W511-10

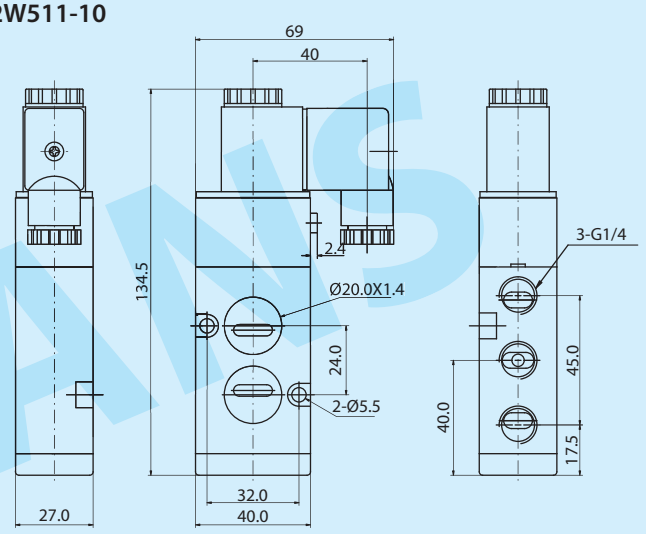

2W521-10

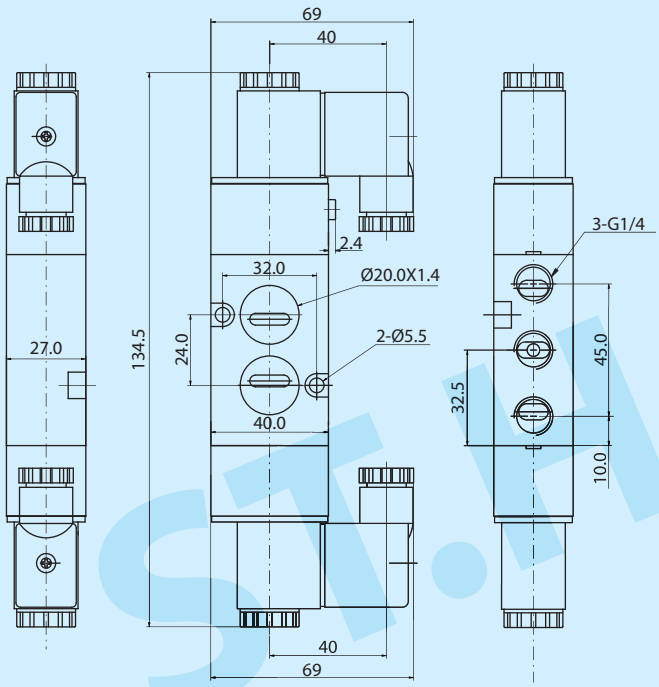

3W521-10

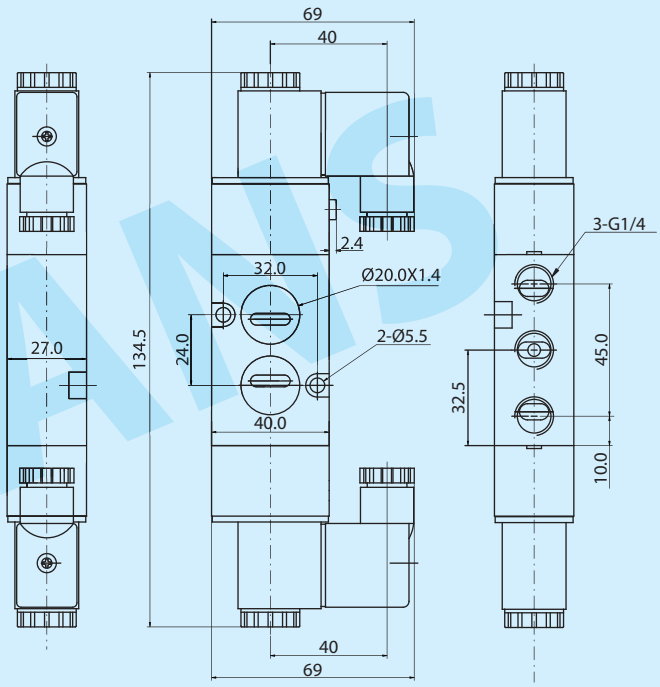

If you enquire any further information, please do not hesitate to contact us.

Dimension

2W312-15-L

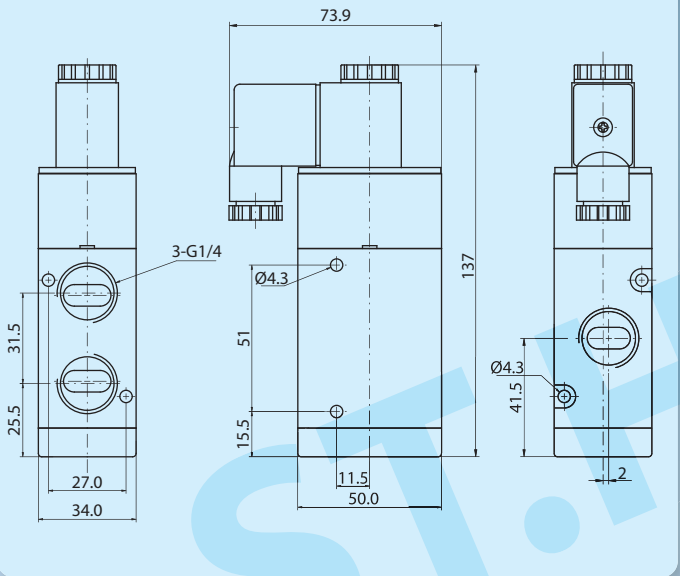

2W512-15-L

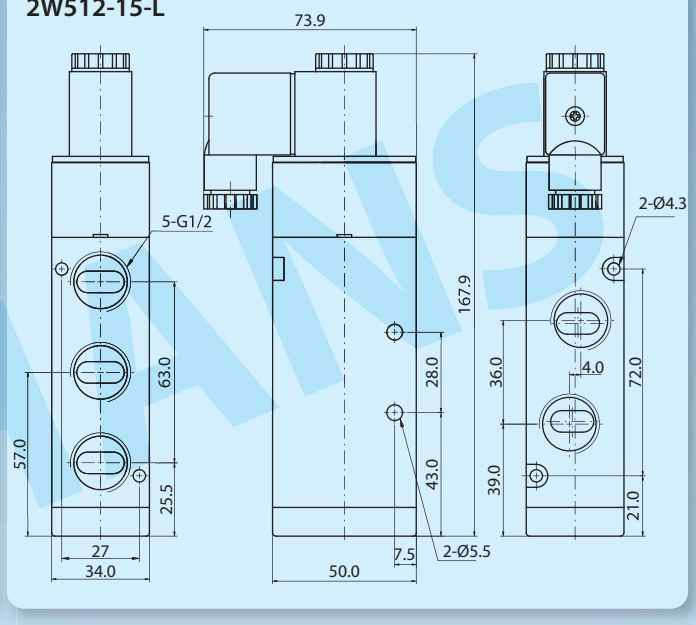

2W522-15-L

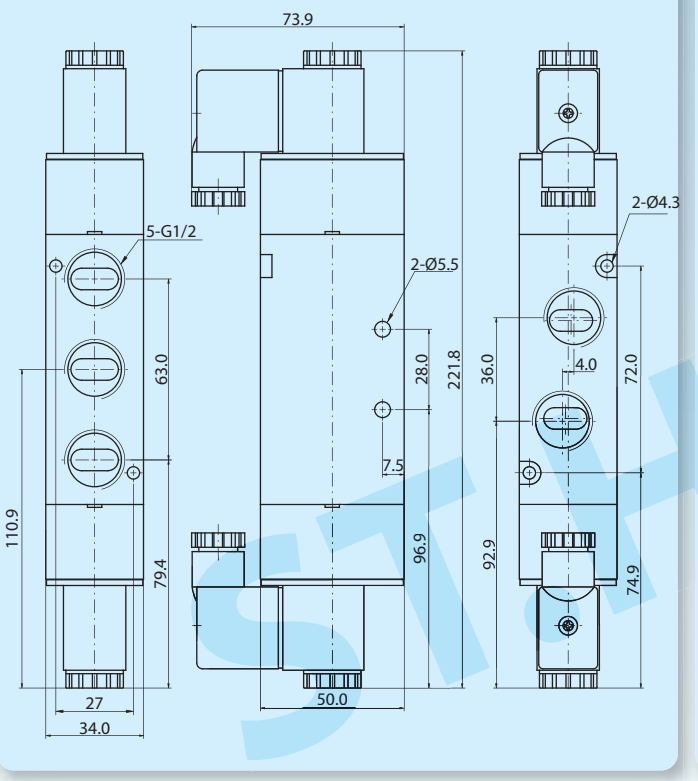

3W522-15-L

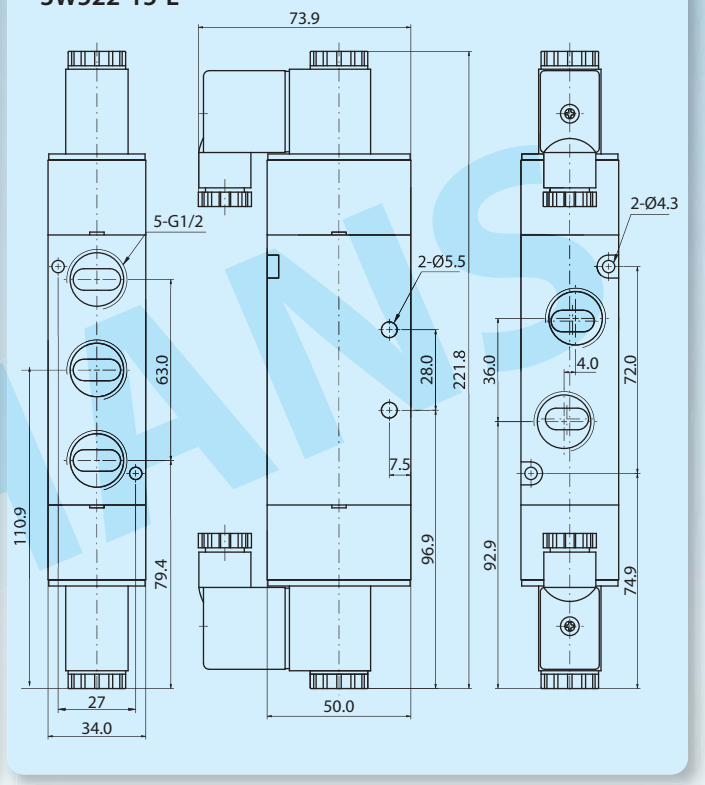

If you enquire any further information, please do not hesitate to contact us.

How to Order

UNIT	1	2	3	4	–	5	6	–	7	8	Product code
CONTENT	Control mode	Standards	Coil	Type		Connection	Body		Power	Explosive-proof	2W511-10-AC220
CODE	None	2W5	1	1		10	None		AC 220	None	
EXAMPLE	Solenoid	2 way 5 Ports	Single	NAMUR		1/4"	Middle		AC 220V		

None	Solenoid
A	Air

2W3	2 way 3 Ports
2W5	2 way 5 Ports
3W5	3 way 5 Ports

1	Single coil
2	Double coils

1	NAMUR
2	PIPE

08	1/8"
10	1/4"
15	1/2"

S	Small
None	Middle
L	Large

DC 24V
DC48V
AC 24V
AC 110V
AC 220V

None
EExm II T4
EExm II T5
EExia II T6

Other Brands

ASCO

SMC

FESTO

PARKER

NOGREN

BURKERT

ST.HANS